SPX POWER TEAM®

SPX Corporation
5885 11th Street
Rockford, IL 61109-3699 USA

Tech. Services: (800) 477-8326
Fax: (800) 765-8326
Order Entry: (800) 541-1418
Fax: (800) 288-7031

Internet Address:
http://www.powerteam.com

Form No. 102993

Operating Instructions for:

110137
110138

REMOTE SENSOR

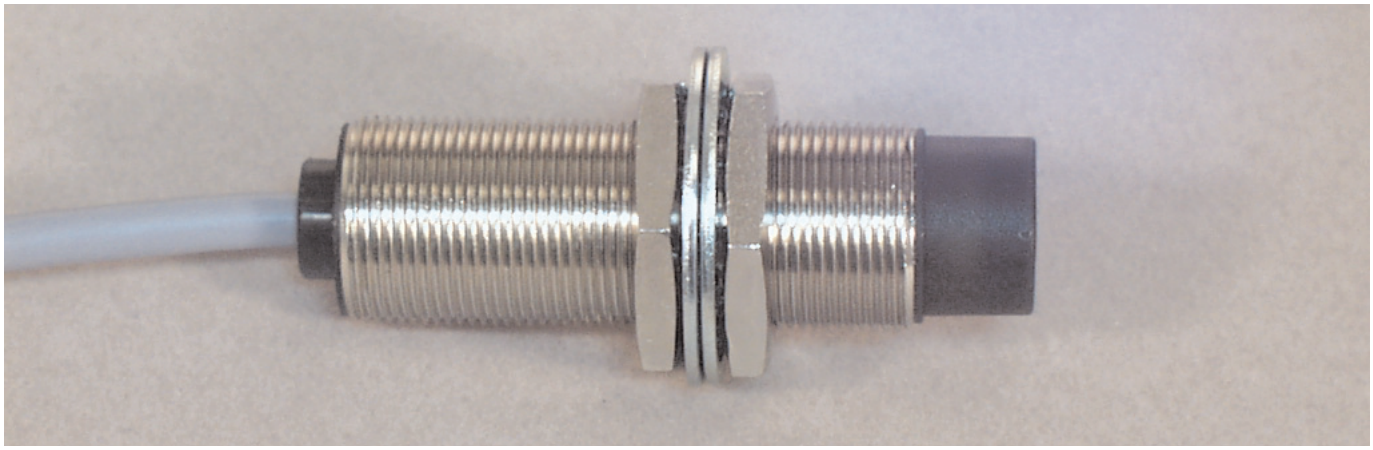

HOW THE SYSTEM WORKS

The system consists of a transmitter (#110138) and a receiver (#110137). The transmitter is located on the pallet and can be connected to a pressure switch (#110143) with a 43650 DIN connector (included) to indicate whether or not the pallet is pressurized. The receiver is connected to your machine's controller or cell PLC at the work station or in the machine.

The pressure switch (#110143) is wired in the normally open position. No power supply is needed to operate the transmitter. Once the pressure switch is actuated, the transmitter inductively sends a signal to the receiver indicating that the pallet is pressurized above the minimum pressure setting in the pressure switch. When the receiver is powered by your 24VDC PLC, you can program machine shut-down, pallet rejection, or simply warn your operator should system pressure fall below the pressure switch setting.

The system can be used to monitor pressure when the transmitter on the pallet passes near the receiver as it travels into the machining center. In applications where the receiver can be mounted in the machine where the pallet is fixed or where the receiver can follow the pallet, constant, non-contact monitoring is possible. A typical system for pallet pressure monitoring requires one receiver (#110137) for each location where pressure is being monitored. Each pallet requires one transmitter (#110138) and one pressure switch (#110143).

It is the responsibility of the installer/operator to correctly use the signal from the sensors to match the application.

The transmitter and receiver pair can be used with any number of switches in series to monitor multiple pressure or positions. Switches must be designed for low amperage applications. Additional switches might be used to monitor workpiece position or ensure that mechanical fixture elements have actuated. This system is also capable of powering one, non-contact proximity sensor, either with or without the pressure switch. Contact Hytec Technical Services Department for instructions.

⚠ WARNING
Inductive proximity sensors are solid state devices. Output is lost when power is disconnected or interrupted.

© SPX Corporation

LOCATING THE SENSORS

The key to the proper operation of the remote sensor system is the alignment of the sensors. The maximum transmission distance between the receiver and transmitter is .157" (4mm). The maximum center offset between the transmitter and receiver is .098" (2.5mm). See diagram below.

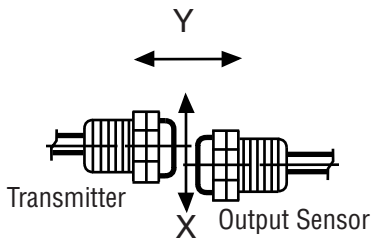

Y= Transmission Distance
X= Center Offset

MOUNTING THE SENSORS

Hytec recommends the use of the mounting brackets supplied to hold the sensors.

When not using the mounting brackets, untapped clearance holes are recommended to avoid deforming the housing shell. The jam nuts and lock washers supplied should be used to hold the sensors in place.

IMPORTANT: To prevent damage to the internal components of the sensor and housing, do not exceed a maximum of 30 ft. lbs. of torque on the jam nuts when mounting the sensors.
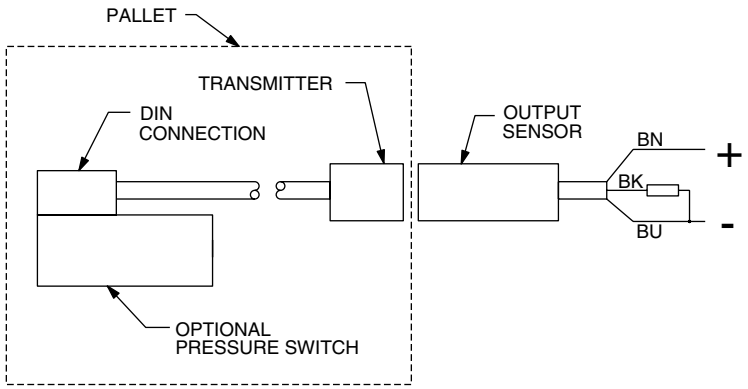
WIRING DIAGRAM