SPX HYTEC®

SPX Corporation
5885 11th Street
Rockford, IL 61109-3699 USA

Tech. Services: (800) 477-8326
Fax: (800) 765-8326
Order Entry: (800) 541-1418
Fax: (800) 288-7031

Internet Address:
http://www.hytec.com

Form No. 101351

Parts List for:

100874
100875
110134

SPRING ADVANCE
HYDRAULIC WORK SUPPORT
1,100 Lbs. Load Capacity at 5,000 PSI

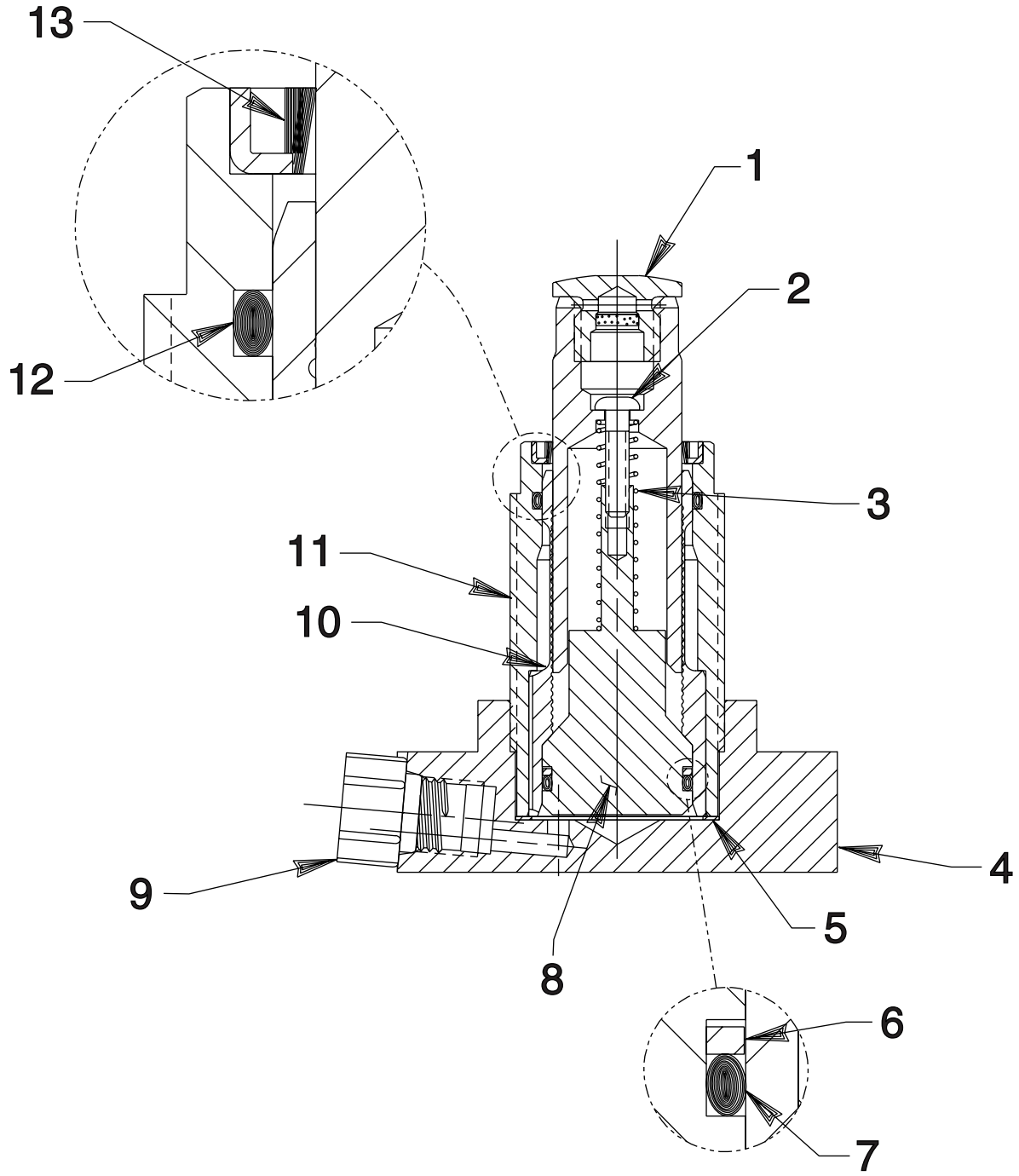

Sheet No.	**1 of 1**
Rev. 2	**Date: 13 Mar. 2000**

Litho in USA

Parts List, Form No. 101351, Back sheet 1 of 1

Item No.	Part No.	No. Req'd	Description
1	**251397**	1	Vented Button Assembly
2	**251242-1**	1	Cap Screw (6-32 UNC x 5/8 Lg.; Apply Loctite 271 or equivalent. Adjust screw to proper stroke.)
3	**251243**	1	Compression Spring (1/4 O.D. x 2.787 Lg.)
4	**500035**	1	Mounting Base (For 100875 only)
	421848	1	Mounting Base (For 110134)
5	***251248**	1	Backup Washer (1-3/16 x 1" x .048)
6	***251247**	1	Backup Washer (7/8 x 3/4 x .048)
7	***251246**	1	O-ring (7/8 x 3/4 x 1/16)
8	**350733**	1	Spring Adapter
9	**250961**	1	Plug (For 100875 only)
	253427	1	Metric Plug (For 110134)
10	**420706**	1	Work Support Sleeve & Plunger Set
11	**420705**	1	Work Support Body (Torque to 85/95 ft. lbs.)
12	***12900**	1	O-ring (1" x 7/8 x 1/16)
13	***251254**	1	Wiper Seal

Part numbers marked with an asterisk (*) are contained in Repair Kit No. 300654.

HYDRAULIC SCHEMATIC

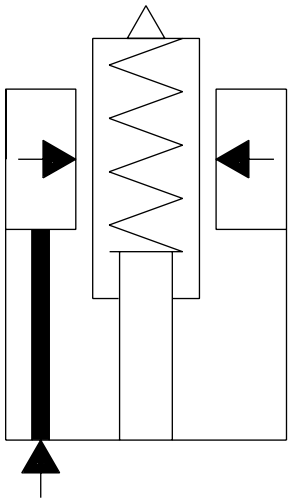

MANIFOLD MOUNT CAVITY DIMENSIONS

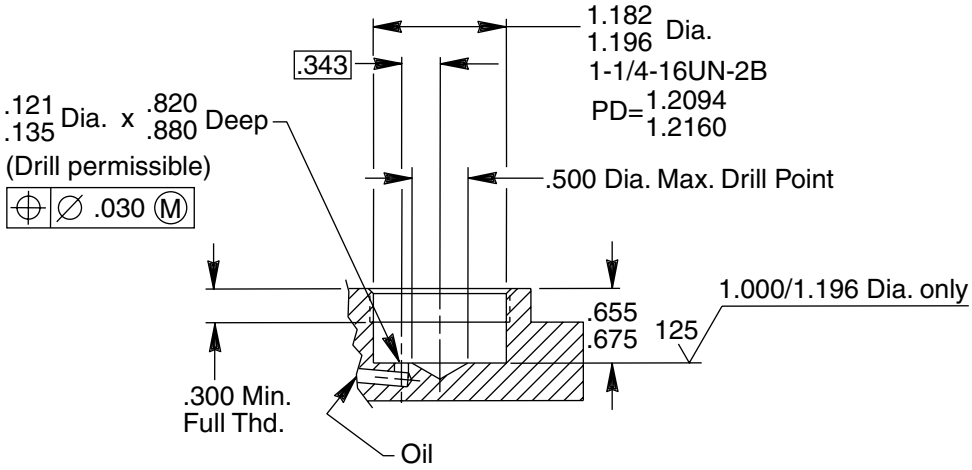

Note: Manifold Mount Cavity Dimensions changed at last revision(s) made to this form.

Refer to any operating instructions included with this product for detailed information about operation, testing, disassembly, reassembly, and preventive maintenance.

Items found in this parts list have been carefully tested and selected. **Therefore: Use only genuine Hytec replacement parts!**

Additional questions can be directed to our Technical Services Department.